Consider the capacitive accelerometer shown in Fig. 1.

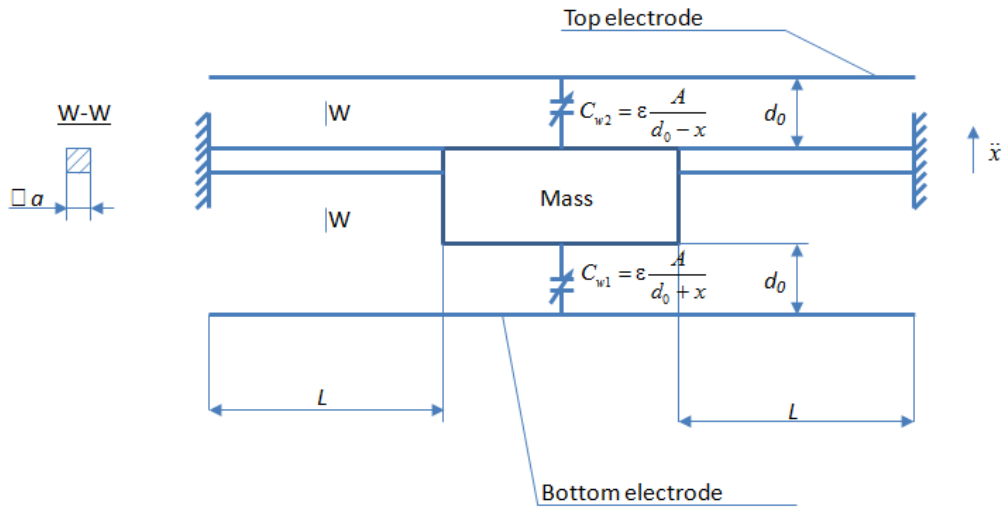

Fig. 1 Capacitive accelerometer

Under the acceleration $|\ddot{x}|$, the capacitances C_{w1} and C_{w2} are changed. The capacitances arise between the electrodes and the proof mass, as shown in Fig. 1. The static displacement *x* of the proof mass *m* is equal to:

$$x = \frac{m|\ddot{x}|}{k_{tot}}, \tag{1.1}$$

where k_{tot} is the total stiffness of the springs. In Fig. 1 is easy to see, that the spring can be modeled by the two guided beams connected in parallel. The beams have the square cross section *axa* and they have length *L*.

The measurement circuit is shown in Fig. 2. This is a capacitive Wheatstone-bridge with the parasitic capacitance.

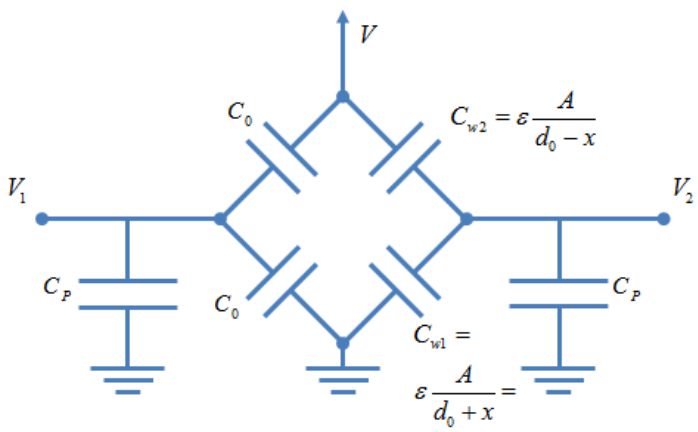

Fig. 2 A capacitive Wheatstone-bridge with parasitic capacitance

The bridge output voltage V_{out} is equal to:

$$V_{out} = V_2 - V_1 = \left(\frac{C_{w2}}{C_{w1} + C_{w2} + C_P} - \frac{C_0}{2C_0 + C_P} \right) V . \tag{1.2}$$

Where C_0 is the capacitance under zero acceleration:

$$C_0 = \varepsilon \frac{A}{d_0}, \tag{1.3}$$

where ε=8.85·10^{-12} F/m is the dielectric permittivity of the air, A denotes the area of the capacitor plate and d_0 is the nominal gap. The parasitic capacitance is denoted by C_P.

The sensitivity of the bridge can be expressed by the following quantity:

$$S_b = \frac{\partial V_{out}}{\partial |\ddot{x}|} . \tag{1.4}$$

Another measure of the sensor quality is related to the nonlinearity of the bridge, especially when the sensitivity S_b is not a constant value.

The least squares Best Fit Straight Line (BFSL) is a statistical method for calculating the sensor nonlinearity measure. In this approach the characteristics of the sensors are correctly optimized at the design stage and are represented by a continuous smooth curve, the assessment is meaningful and accurate. In Fig. 3 the relation between the input X (the acceleration $|\ddot{x}|$) and the output Y (the voltage signal V_{out}) of the sensor bridge is presented.

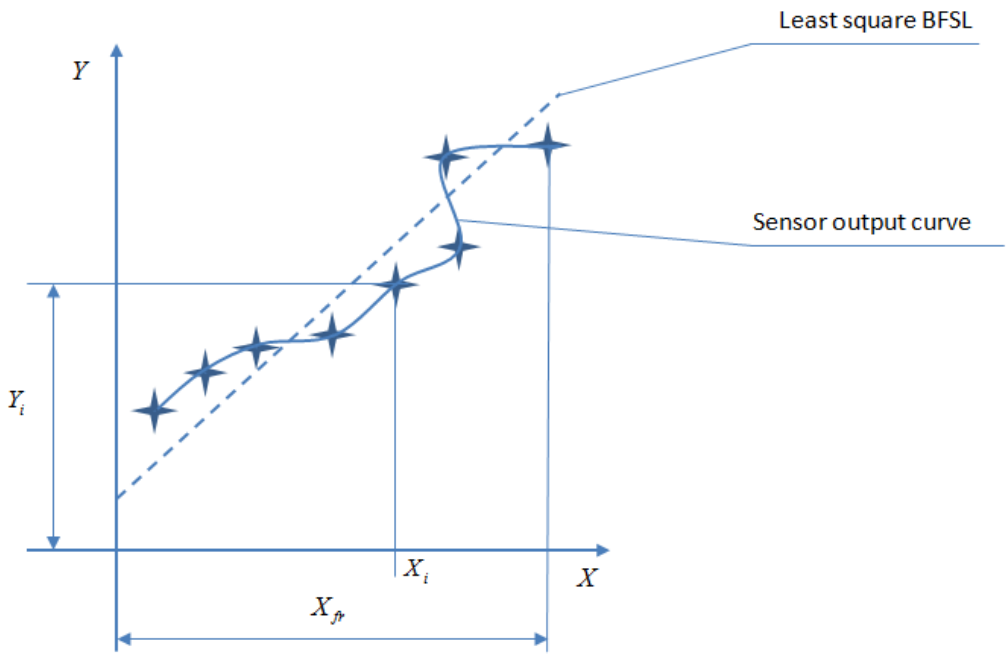

Fig. 3 Input-output curve for sensor bridge

In practice, up to 10-20 calibration points will be taken over the whole working range of the sensor and the measured input and output values at each point used to provide the data for calculation of the slope *SL* of the 'Least Squares Best Fit Straight Line' using the following equation:

$$SL = \frac{\sum_{i=1}^{n} X_i Y_i}{\sum_{i=1}^{n} X_i^2}, \tag{1.5}$$

where *n* is the number of data points.

Having mathematically determined the slope of the best fit straight line it is then possible to determine the maximum percentage deviation D_i of any point from this line using the equation:

$$D_i = \frac{(Y_i - SL \cdot X_i)}{SL \cdot X_{fr}} \cdot 100\%, \tag{1.6}$$

where Y_i is the value of the output at the X_i point and the index *fr* denotes the full working range of the input variable.

The value given by the equation (1.7):

$$D = \max D_i \tag{1.7}$$

allows to measure the nonlinearity of the sensor.

The calculations for the sensor transfer function (1.2) and the sensitivity (1.4) can be perform analytically in the first step. The MATLAB Symbolic Math Toolbox allows to perform the transformation of the equations by the following code:

```
syms V e A d0 m ktot xdot2 Cp C0 % the symbolic variables definition
x=m*xdot2/ktot  % the displacement of the capacitor plate, equation (1.1)
Cw1=e*A/(d0+x) % the variable capacitances, equations form Fig. 2
Cw2=e*A/(d0-x)
Vout=Cw2*V/(Cw1+Cw2+Cp)-C0*V/(2*C0+Cp) % the output voltage signal, (1.2)
Sb=diff(Vout,xdot2) % the sensitivity of the bridge, (1.4)
```

The symbolic variables “Vout” and “Sb” store the values of the sensor transfer function and the sensitivity of the bridge according to (1.2) and (1.4). The symbolic variables can be transform into the MATLAB function by using the following commands:

```
matlabFunction(Vout,'file','sensor_TF')
matlabFunction(Sb,'file','sensor_sensitivity')
```

The new files are created and they contain the functions “sensor_TF” and “sensor_sensitivity” with the input variables given in the header of each function. The created functions are vectorized and now the characteristics $V_{out} = f(|\ddot{x}|)$ and $S_b = f(|\ddot{x}|)$, plots and the measure of the nonlinearity can be easy obtained by using the ordinary MATLAB commands.